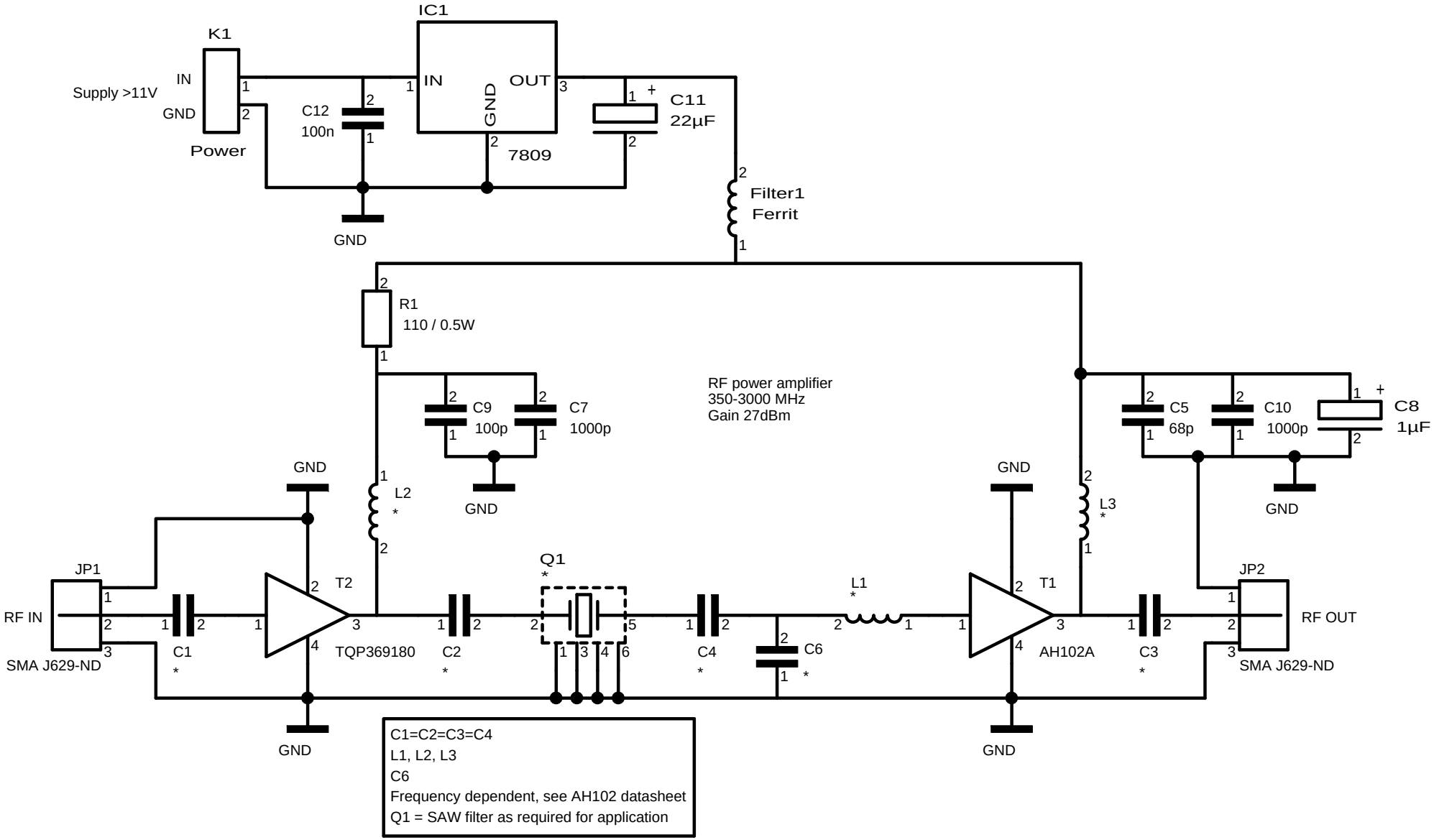
IC1
K1
IN
Supply >11V
GND
Power
IN
OUT
GND
7809
C12
100n
C11
22µF
GND
Filter1
Ferrit
R1
110 / 0.5W
RF power amplifier
350-3000 MHz
Gain 27dBm
C9
100p
C7
1000p
GND
C5
68p
C10
1000p
C8
1µF
GND
GND
L2
*
GND
L3
*
Q1
*
JP1
RF IN
SMA J629-ND
C1
*
T2
TQP369180
C2
*
C4
*
C6
*
L1
*
T1
AH102A
C3
*
JP2
RF OUT
SMA J629-ND
GND
GND
C1=C2=C3=C4
L1, L2, L3
C6
Frequency dependent, see AH102 datasheet
Q1 = SAW filter as required for application